Reg. No. | | | | | | | | | | | [18ESEE02]

SECOND SEMESTER B.Tech EXAMINATION, JUNE–2019

BASICS OF ELECTRICAL ENGINEERING

Time:3 Hours **Maximum Marks:70**

Instructions:
i. Answer any **FIVE** full Questions (Q.No 1 & Q.No 2 is compulsory)
ii. Missing data may be suitably assumed.

1. a. Explain an ideal voltage source and a practical current source. **04**

b. A network ABCD is made up as follows **06**

AB a cell of 2V and negligible resistance with the +ve terminal connected to A

BC a resistor of 25 ohms

CD a resistor of 100 ohms

DA a battery of 4V and negligible resistance

With the +ve terminal connected to A

AC a milliammeter of R 10 ohms . Calculate the current in the milli ammeter.

c. Calculate the total electric power consumed in the circuit shown in fig1c. **04**

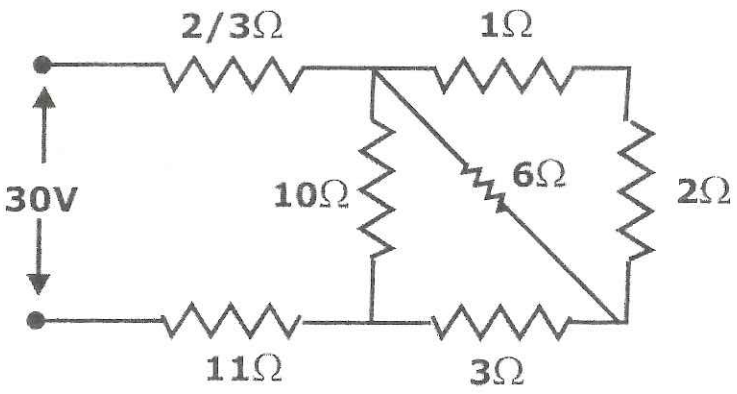

Fig 1c

2. a. Draw the voltage and current waveforms with **03**

i. Voltage leading current by 30°

ii. Voltage and current having phase difference of 180°

iii. Voltage and current in phase.

b. When a voltage of v=230 sin 314 t is applied to a series circuit, current i=10 sin (314t+π/6). What is the frequency, resistance and reactance of the circuit. **05**

c. Obtain the relation between line and phase values of voltages and current in a star connected system **06**

JAIN (Deemed-to-be University) Learning Resource Centre Jain Global Campus Ramanagar-112

3. a. Explain the principle of operation of a transformer on NO load. **05**

b. Draw the equivalent circuit of the transformer and explain **06**

c. What is regulation in a transformer? **03**

OR

4. a. List various losses which occur in a transformer with relevant equations. Will losses vary with load? **06**

b. Obtain an expression for finding efficiency of a given transformer. **04**

c. What is an auto transformer? How it is represented. **04**

5. a. Explain with necessary diagrams, how rotating magnetic field is obtained in 3 ø Induction motor? **05**

b. Obtain an expression for Torque developed in a DC Motor. **05**

C. Explain any two methods to control the speed of a DC Motor. **04**

OR

6. a. Explain the working principle of a 3 phase Induction Motor. **05**

b. Draw the Torque v/s Slip characteristics of a 3 phase Induction motor, also indicate different operating regions **05**

C. What is slip in an Induction motor and what is the frequency of induced emf in the rotor circuit at standstill. **04**

7. a. List various types of wires and cables **04**

b. How to improve the power factor of the load , when the load is highly inductive. **05**

C. If the load pattern per day is as shown , what is the energy consumed for 30 days **05**

Equipments	No of Hours used per day
Fan 100 W	6 Hours
Lamp 60 W	4 Hours
TV 80W	12 Hours
Geyzer 2000 W	1 Hour

OR

8. a. Write a note on **06**

i. Over current protection

ii. ELCB

b. Why earthing is important? Explain with a neat sketch how pipe earthing is done. **05**

C. How many units of energy is consumed if one 40 W tubelight and one 35 W bulb is used for 40 Hours. **03**